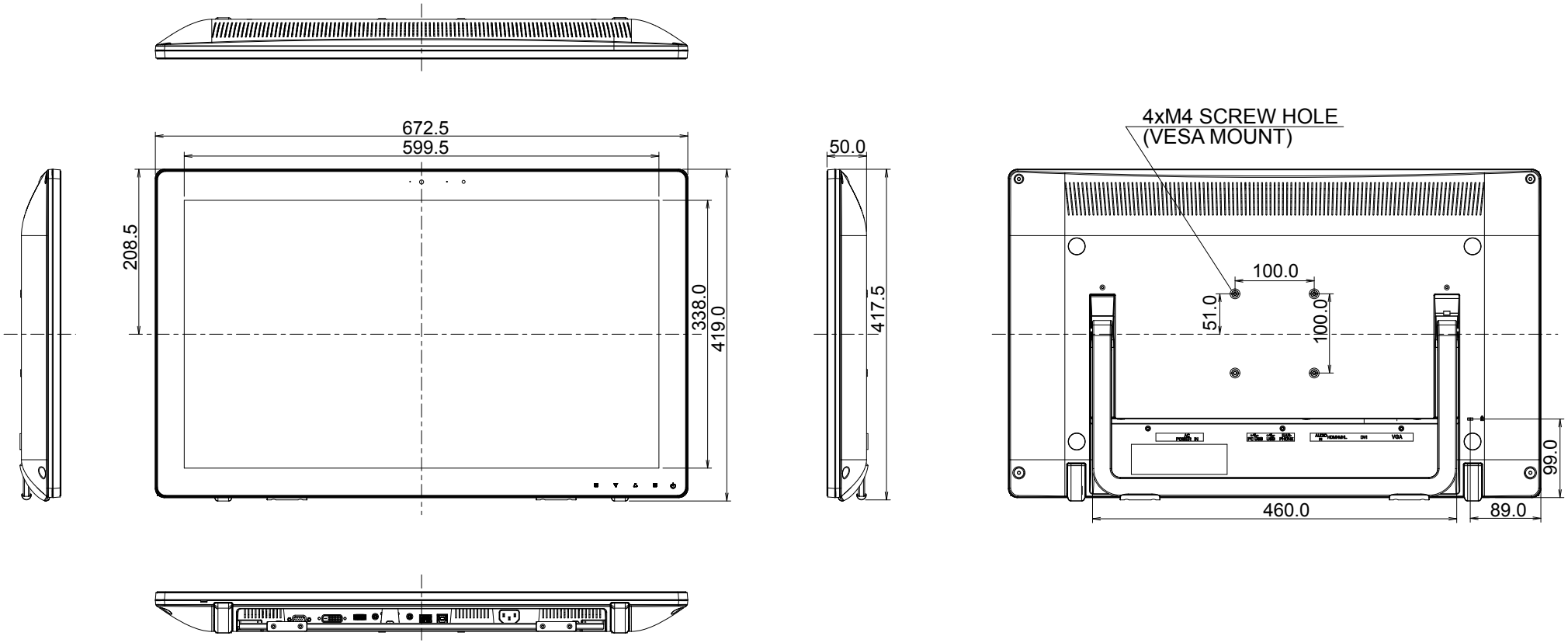
672.5
599.5
208.5
338.0
419.0
50.0
417.5
4xM4 SCREW HOLE
(VESA MOUNT)
100.0
51.0
100.0
99.0
460.0
89.0