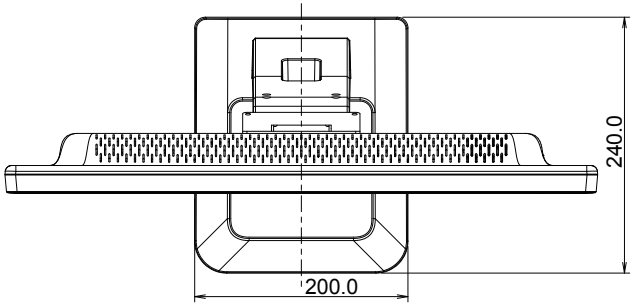
240.0
200.0

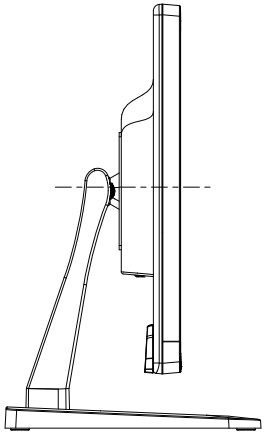

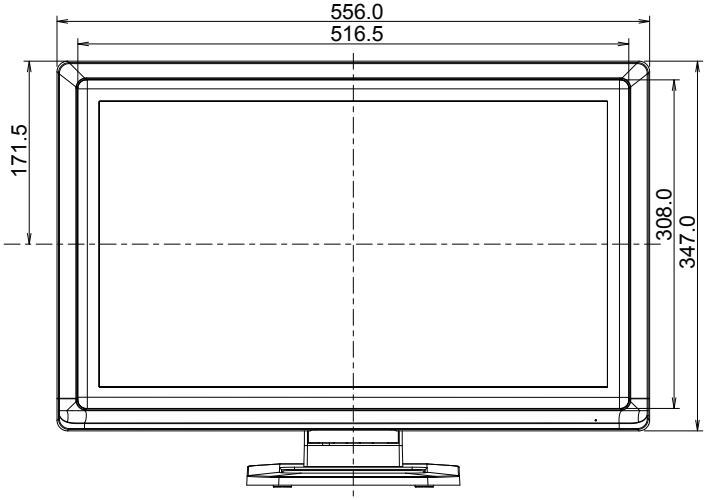
556.0
516.5
171.5
308.0
347.0

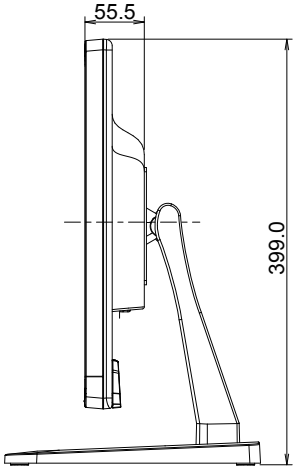
55.5
399.0

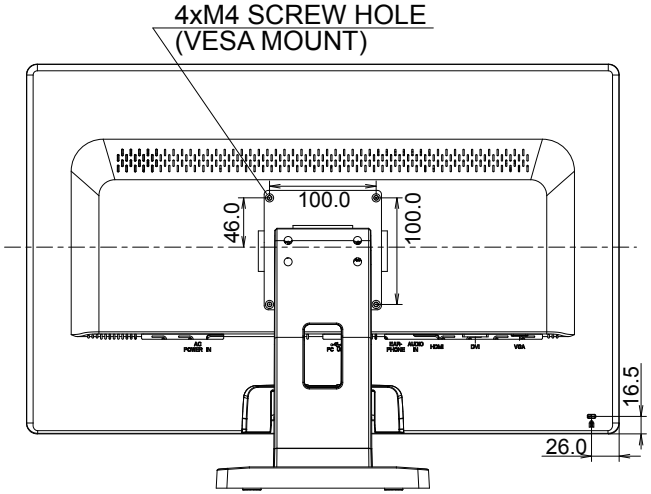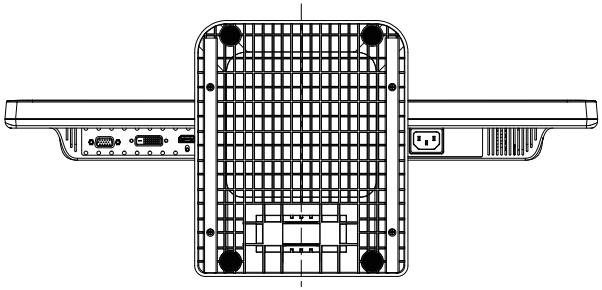
4xM4 SCREW HOLE
(VESA MOUNT)
100.0
46.0
100.0
16.5
26.0