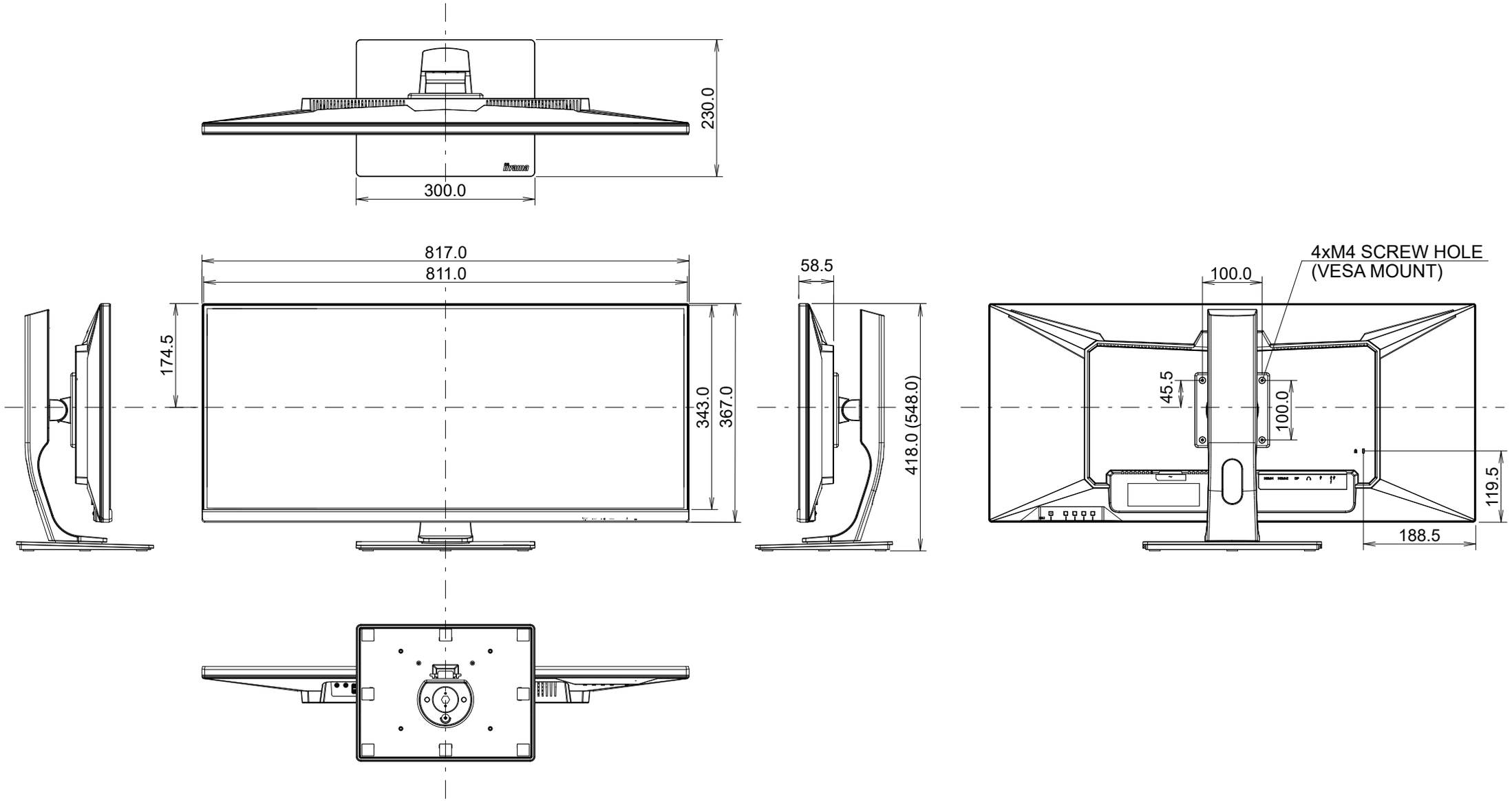
230.0
300.0
817.0
811.0
174.5
343.0
367.0
58.5
418.0 (548.0)
4xM4 SCREW HOLE
(VESA MOUNT)
100.0
45.5
100.0
119.5
188.5