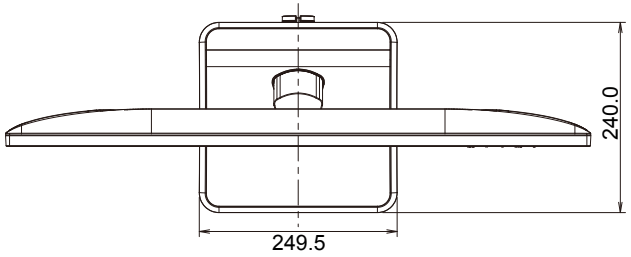
240.0
249.5

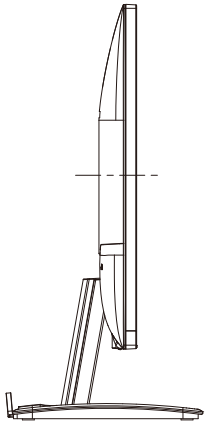

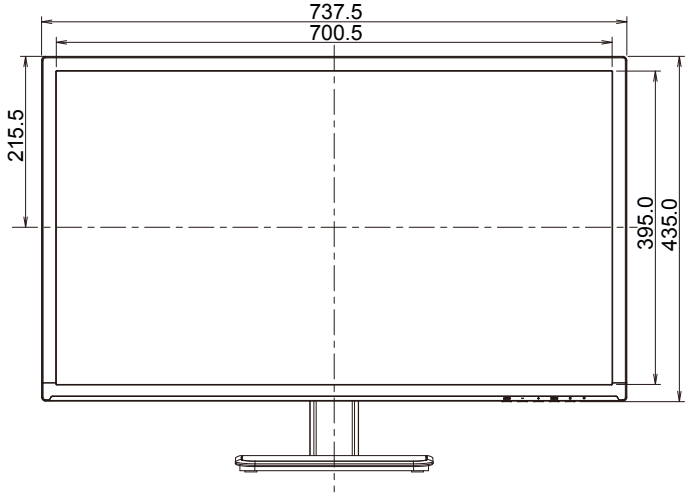
737.5
700.5
215.5
395.0
435.0

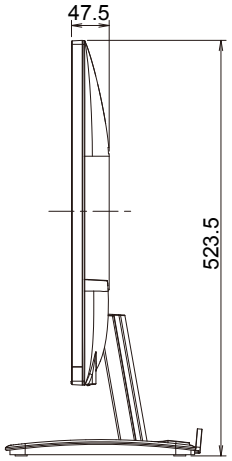
47.5
523.5

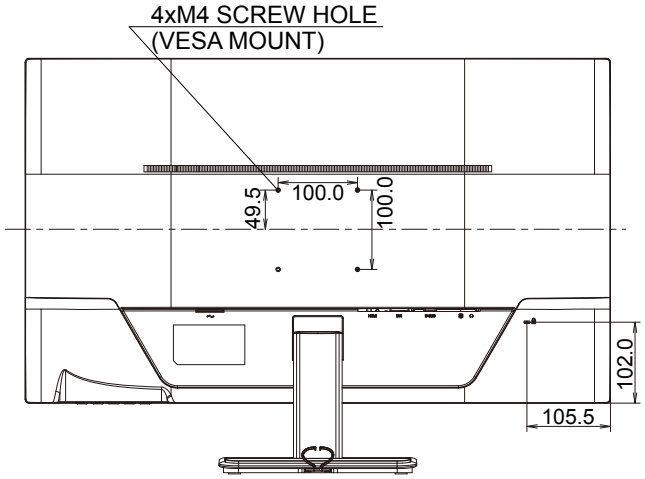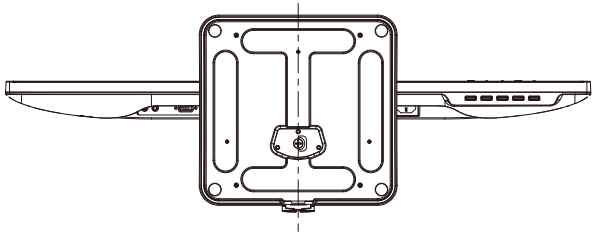
4xM4 SCREW HOLE
(VESA MOUNT)
100.0
49.5
100.0
102.0
105.5