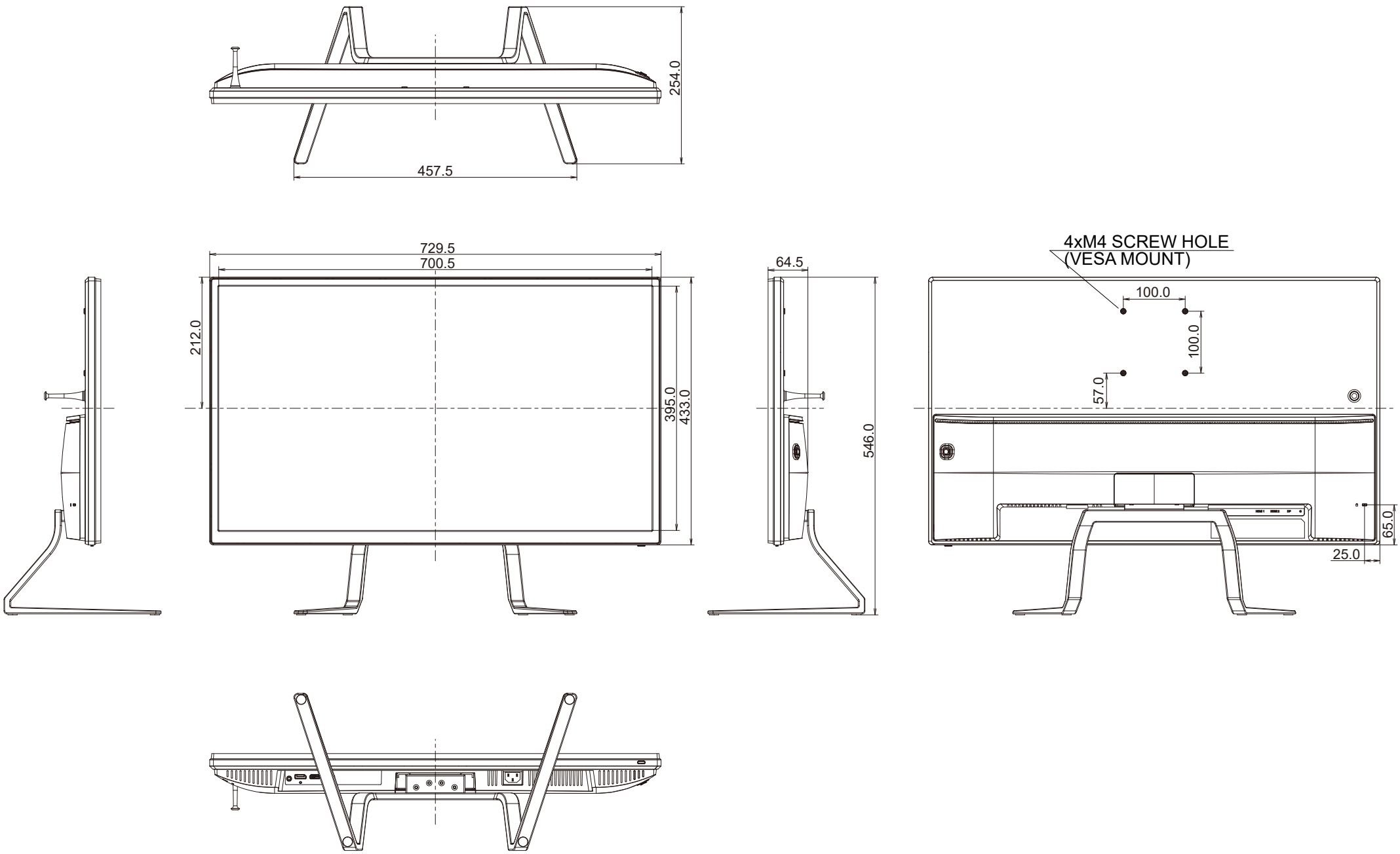
254.0
457.5
729.5
700.5
212.0
395.0
433.0
64.5
546.0
4xM4 SCREW HOLE
(VESA MOUNT)
100.0
100.0
57.0
65.0
25.0