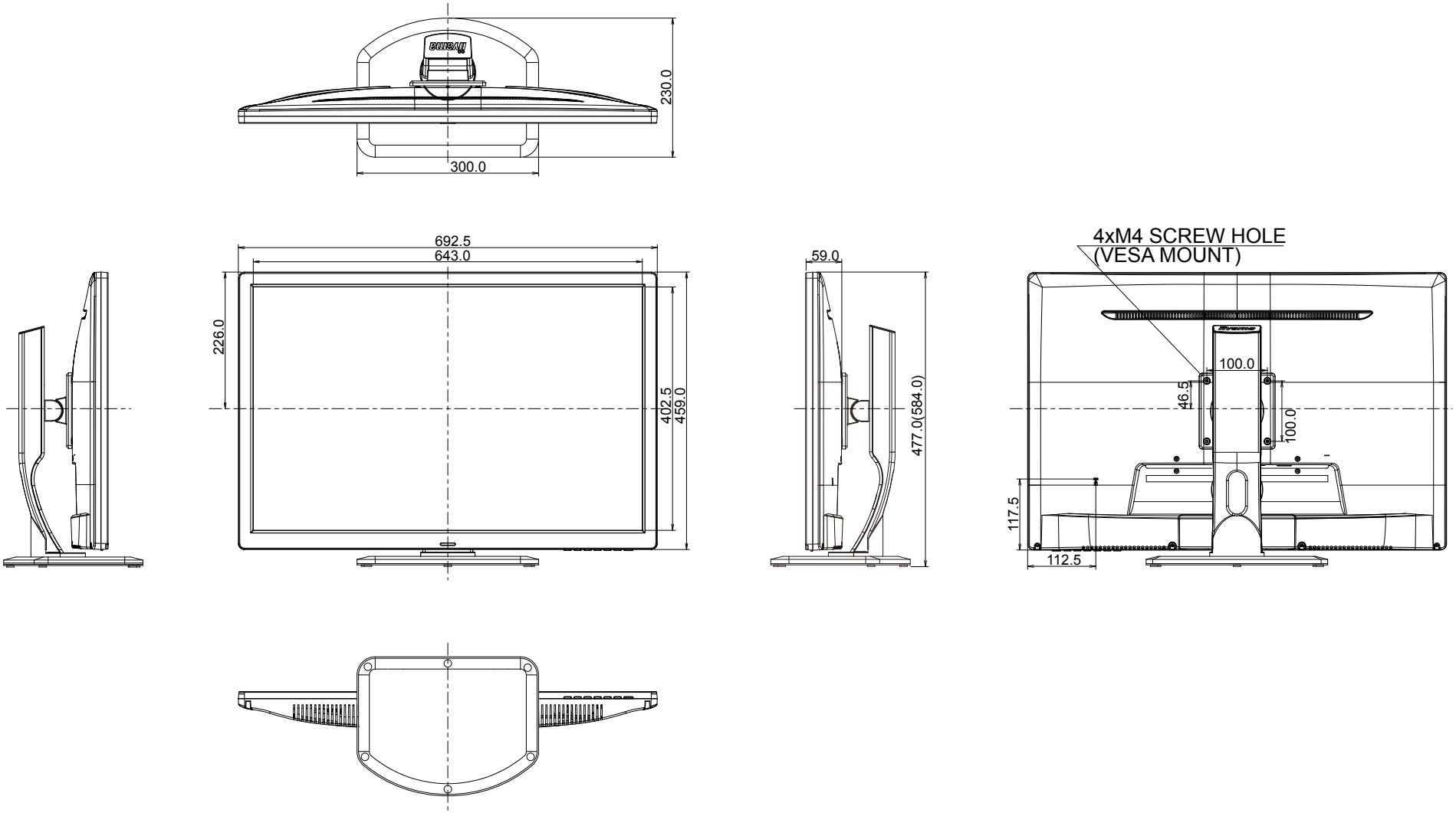
230.0
300.0
692.5
643.0
226.0
402.5
459.0
59.0
477.0(584.0)
4xM4 SCREW HOLE
(VESA MOUNT)
100.0
46.5
100.0
117.5
112.5