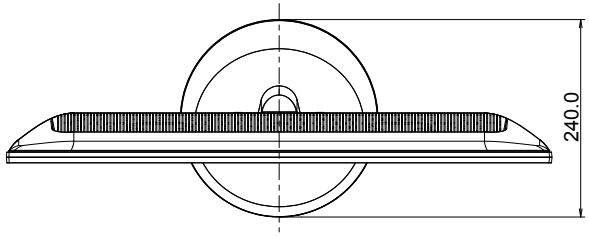
240.0

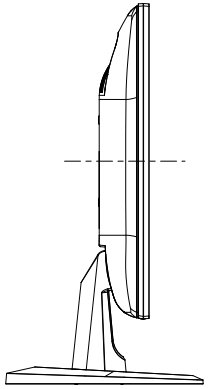

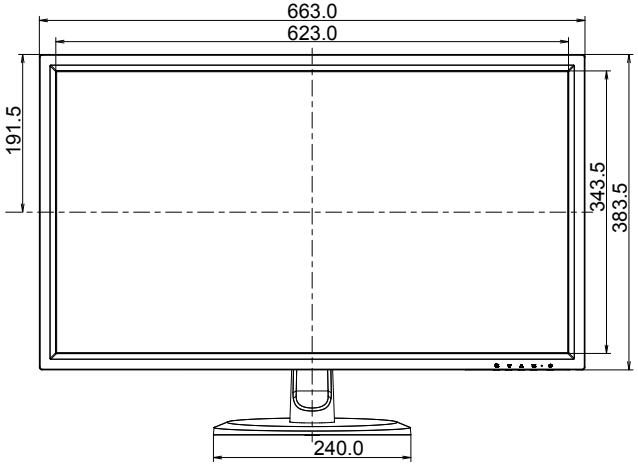
663.0
623.0
191.5
343.5
383.5
240.0

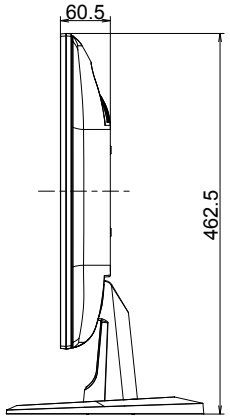
60.5
462.5

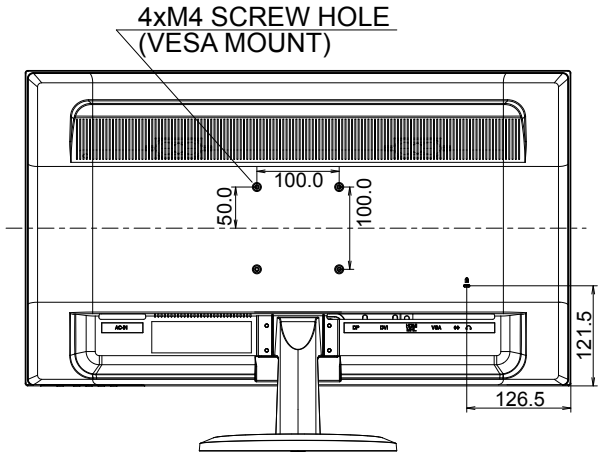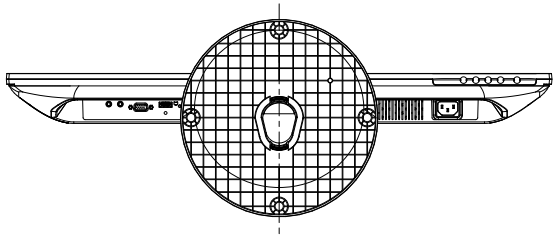
4xM4 SCREW HOLE
(VESA MOUNT)
100.0
50.0
100.0
121.5
126.5