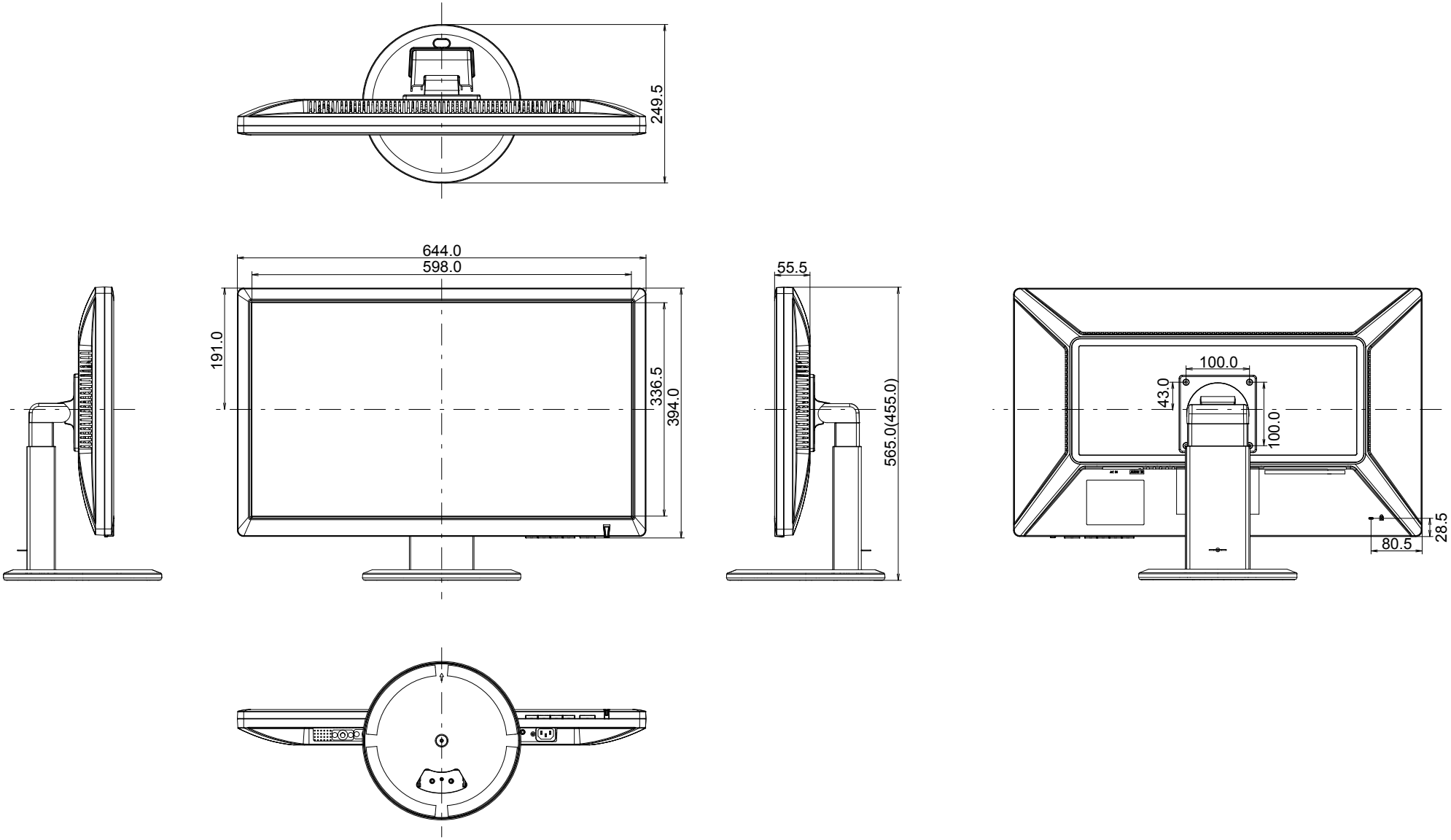
249.5
644.0
598.0
191.0
336.5
394.0
55.5
565.0(455.0)
100.0
43.0
100.0
28.5
80.5