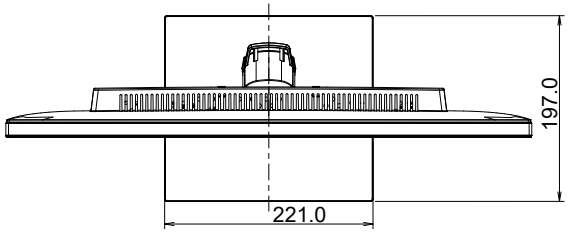
197.0
221.0

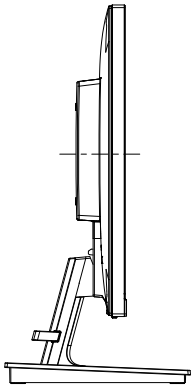

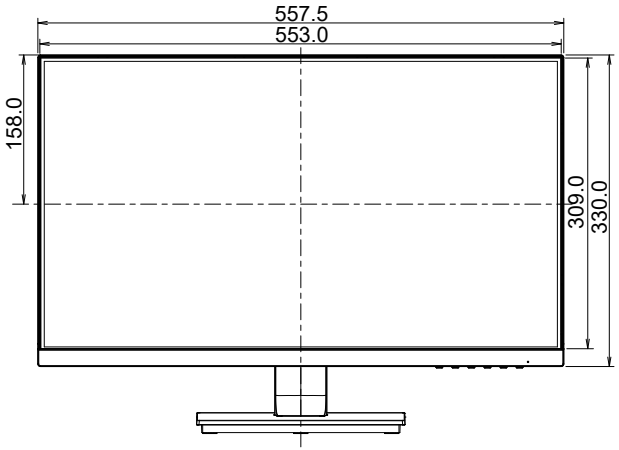
557.5
553.0
158.0
309.0
330.0

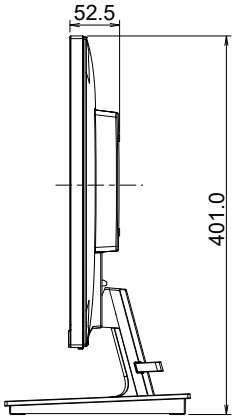
52.5
401.0

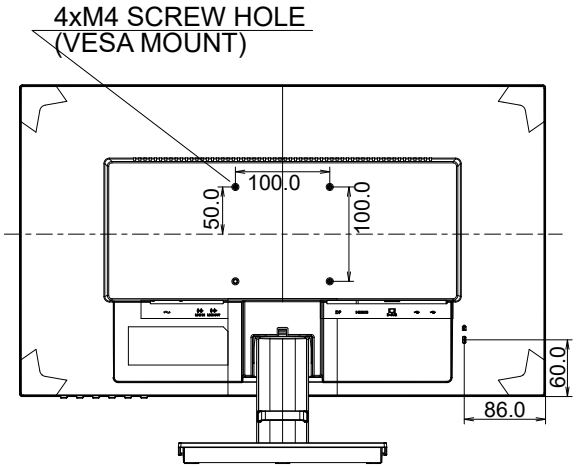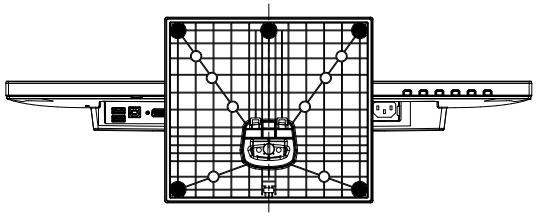
4xM4 SCREW HOLE
(VESA MOUNT)
100.0
50.0
100.0
60.0
86.0