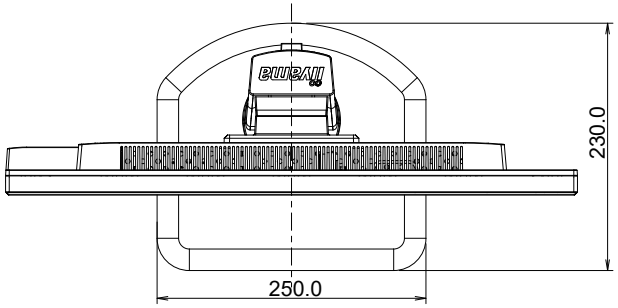
230.0
250.0

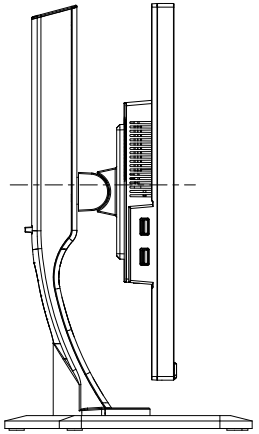

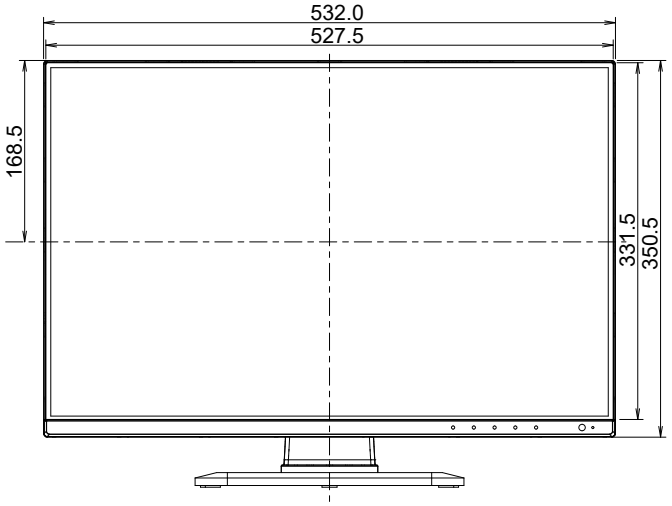
532.0
527.5
168.5
331.5
350.5

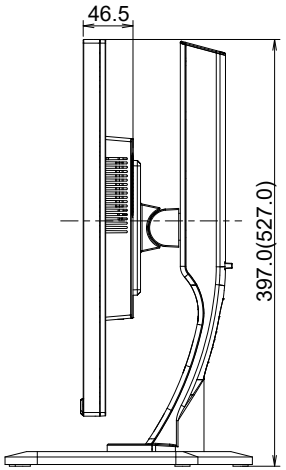
46.5
397.0(527.0)

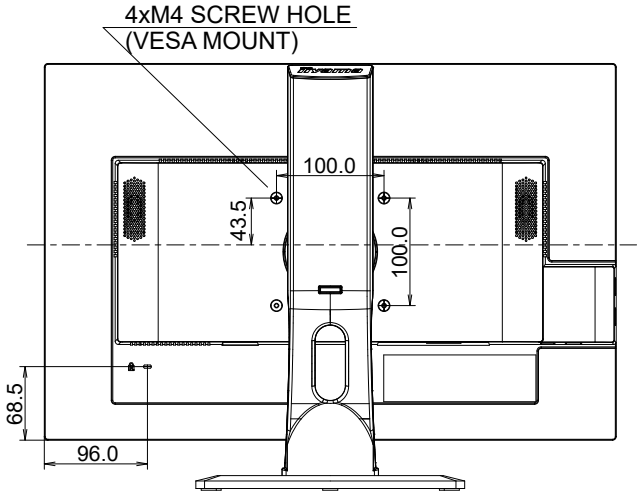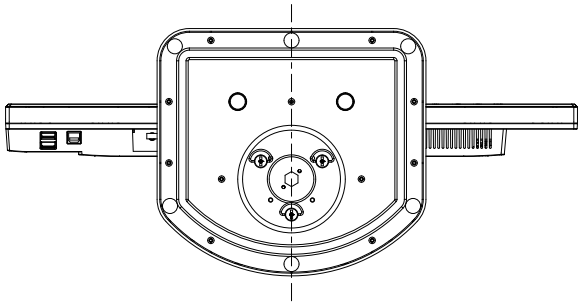
4xM4 SCREW HOLE
(VESA MOUNT)
100.0
43.5
100.0
68.5
96.0