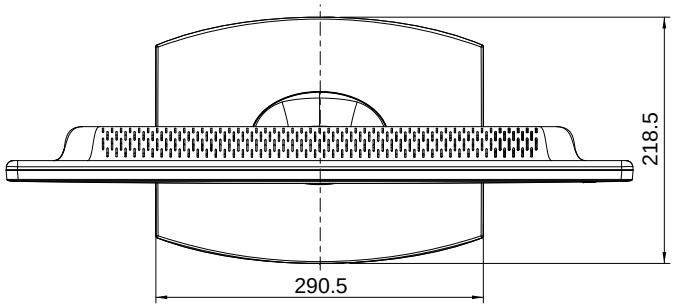
218.5
290.5

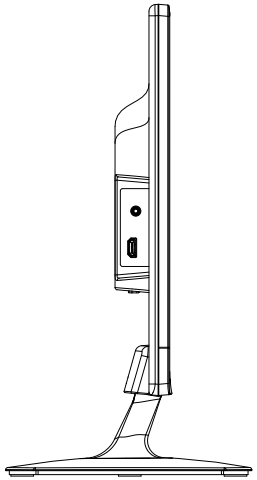

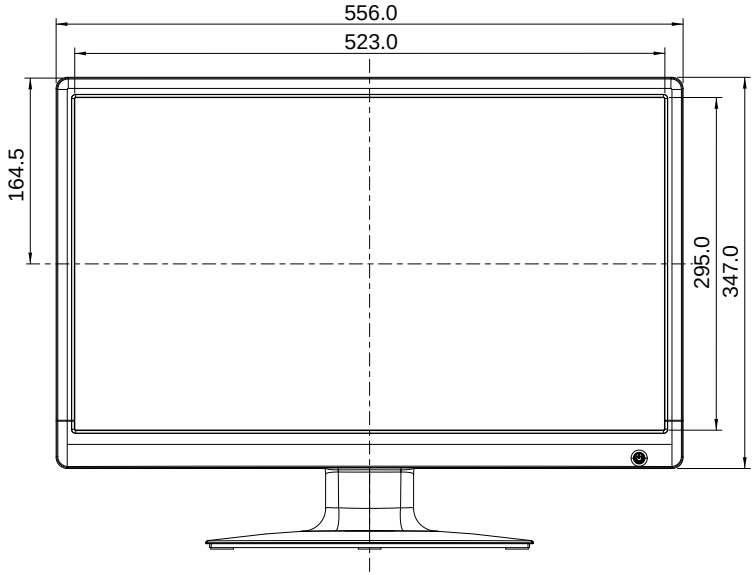
556.0
523.0
164.5
295.0
347.0

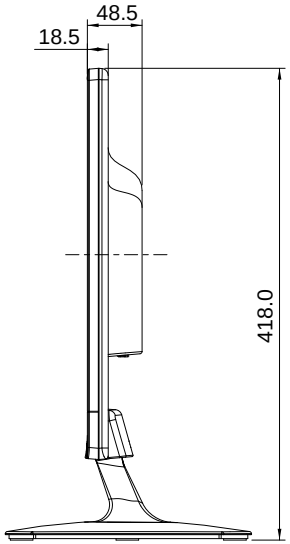
48.5
18.5
418.0

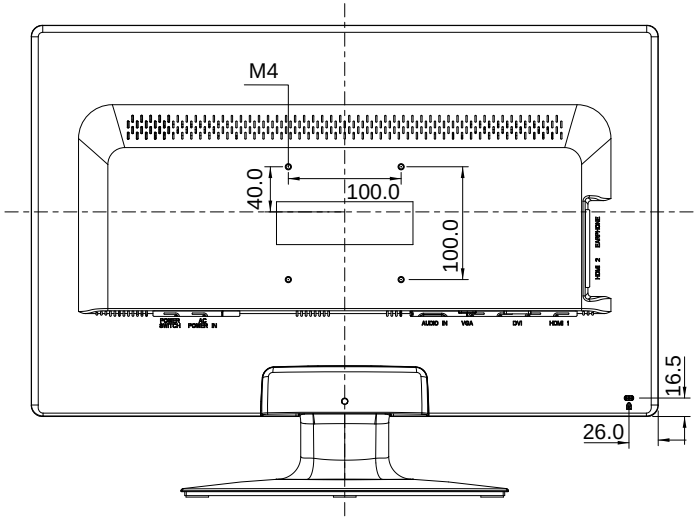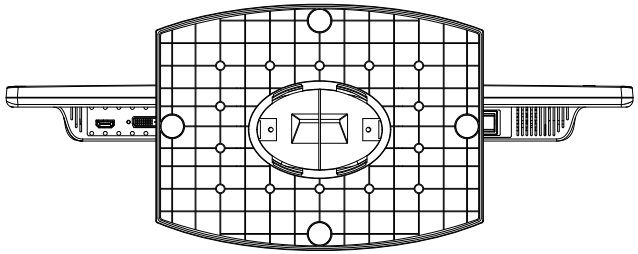
M4
40.0
100.0
100.0
16.5
26.0
POWER SWITCH
DC POWER IN
AUDIO IN
VGA
DVI
HDMI 1
HDMI 2
SUPPORT