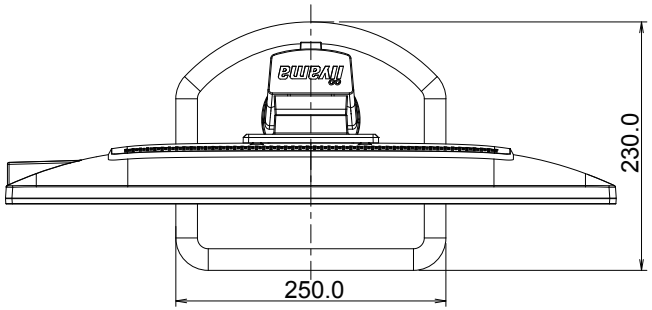
230.0
250.0

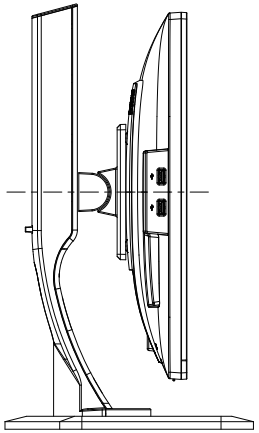

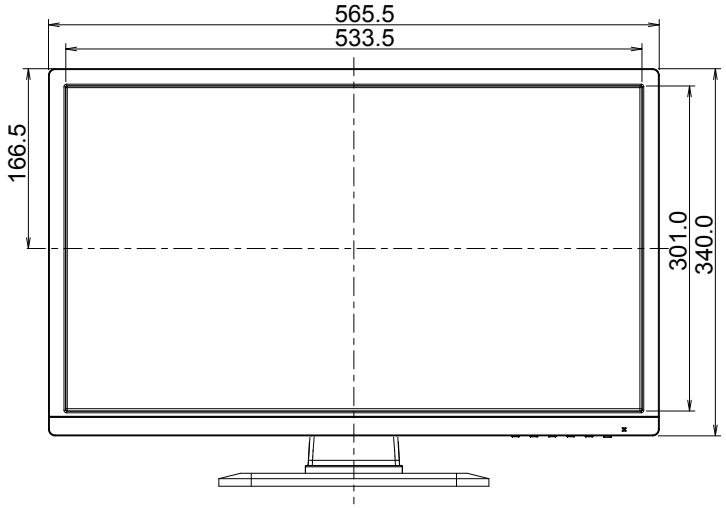
565.5
533.5
166.5
301.0
340.0

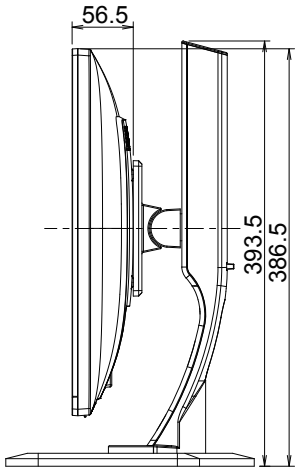
56.5
393.5
386.5

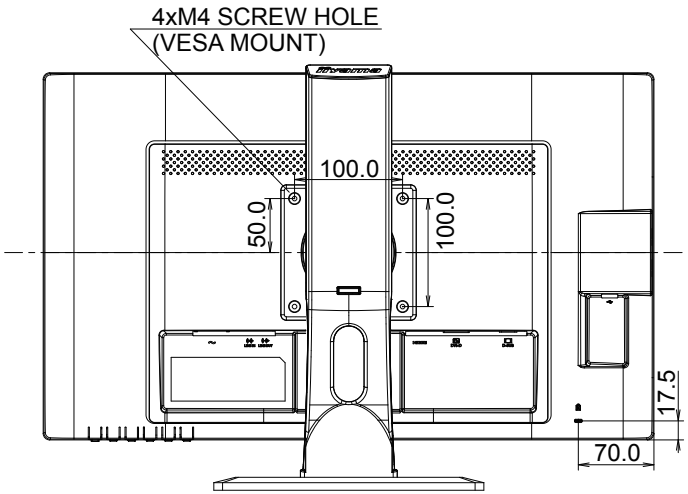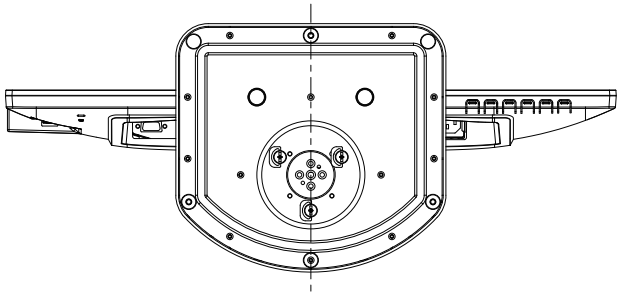
4xM4 SCREW HOLE
(VESA MOUNT)
100.0
50.0
100.0
17.5
70.0