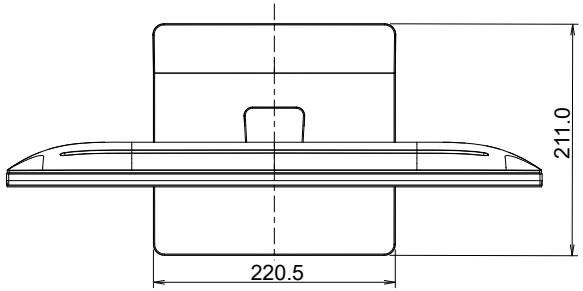
211.0
220.5

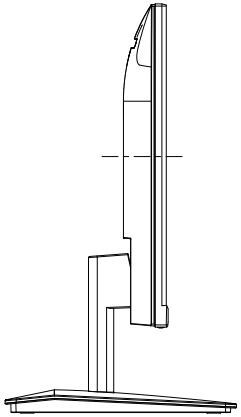

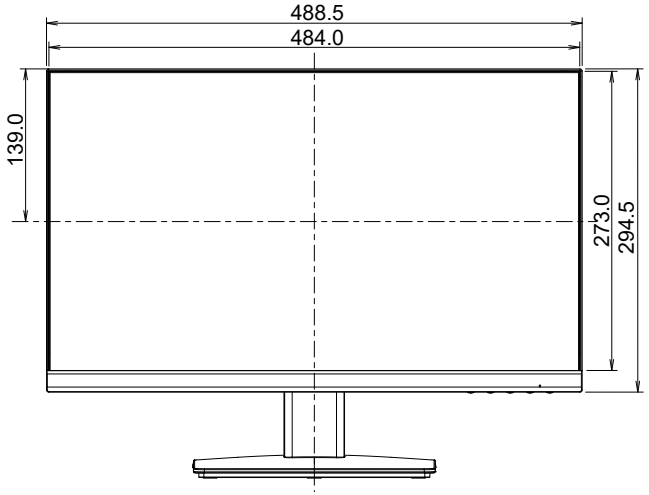
488.5
484.0
139.0
273.0
294.5

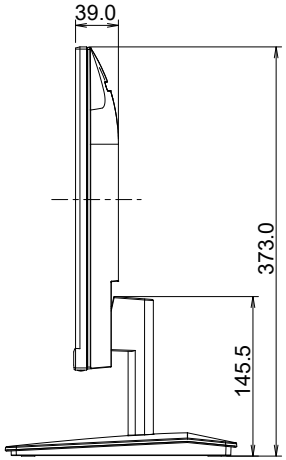
39.0
373.0
145.5

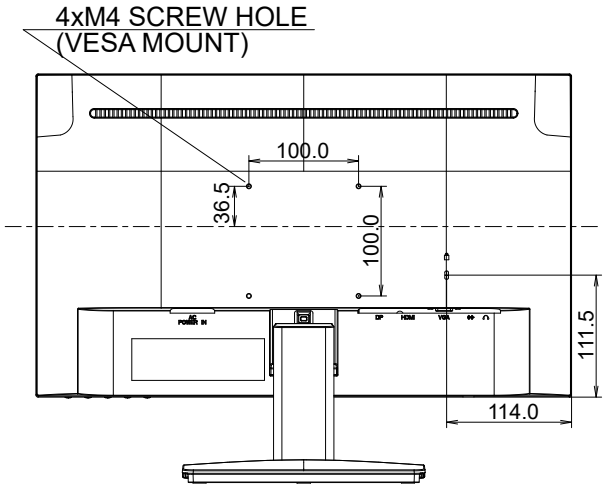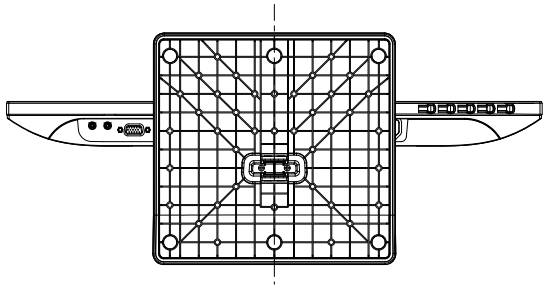
4xM4 SCREW HOLE
(VESA MOUNT)
100.0
36.5
100.0
111.5
114.0