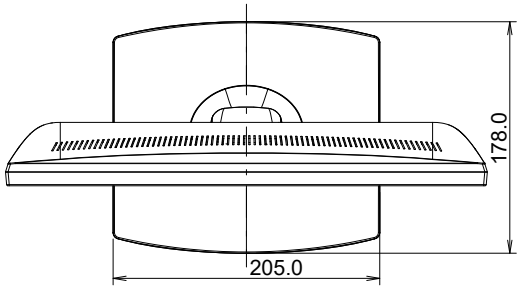
178.0
205.0

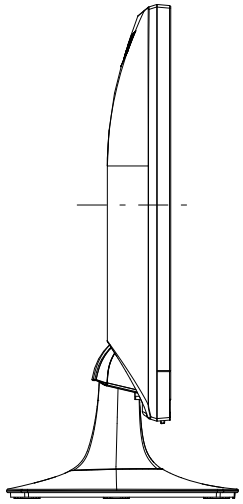

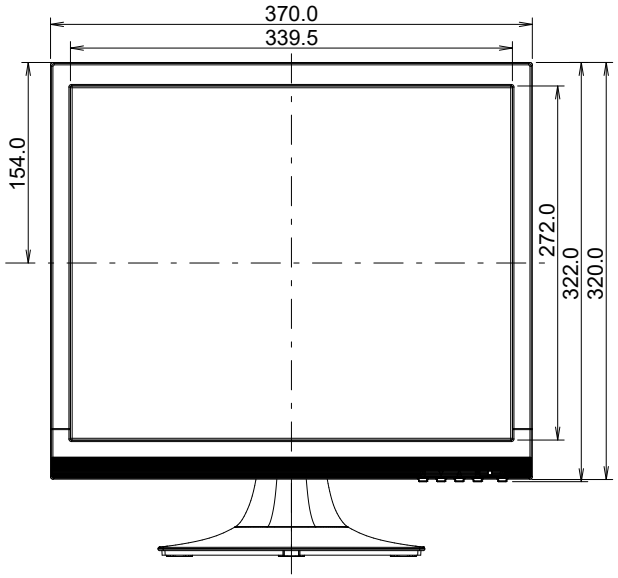
370.0
339.5
154.0
272.0
322.0
320.0

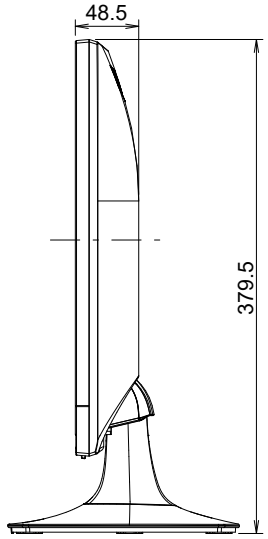
48.5
379.5

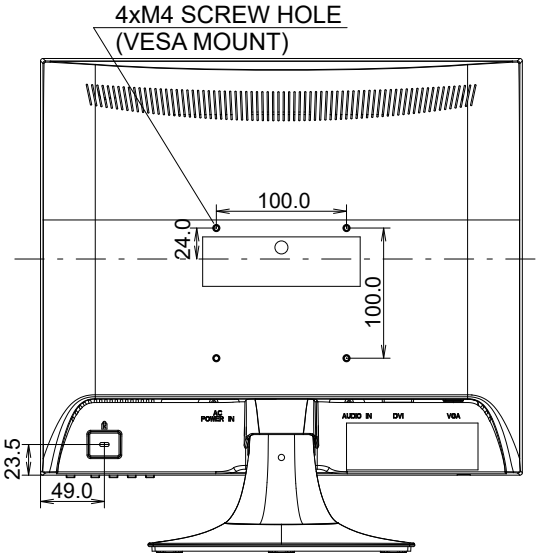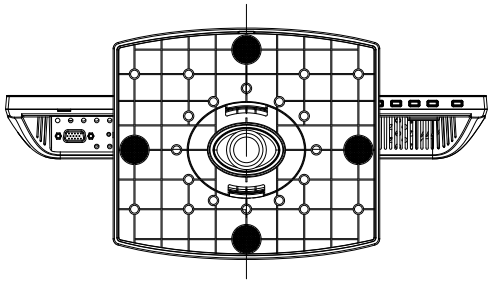
4xM4 SCREW HOLE
(VESA MOUNT)
100.0
24.0
100.0
23.5
49.0
AC POWER IN
AUDIO IN
DVI
VGA